Taisei Kogyo Co., LTD

Fine Bubble Generator

HELIX NOZZLE

Type : TH-03/05/07/10

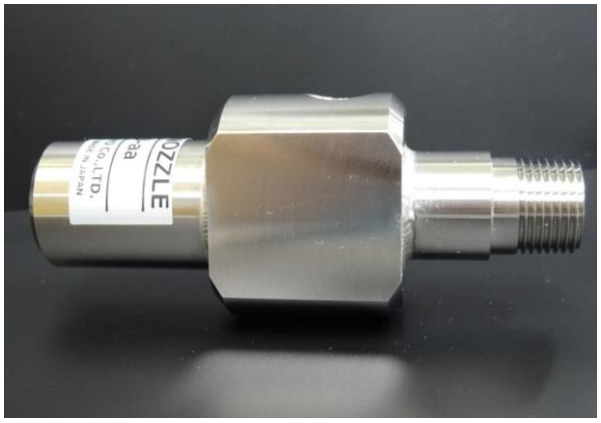

Main use of Fine Bubble

Fine Bubble is effective in various fields are expected.

Industry	Agriculture	Fishery	Foods
-Washing -Effluent treatment -Fineness Peel	-Agricultural Water -Hydroponic culture -Plant factory	-Cultivation -Maintain freshness	-Washing vegetable -Sterilization , Disinfect -Function water
Environment	**Pet**	**Beauty health**	**Etc.**
-Water quality improvement -Effluent treatment -Oil-water separation	-Bath for pets -Shower for pets	-Shower -Spa -Cosmetics	-Medical -Chemical synthesis -Ships Etc.

Fine Bubble washing

Fine bubble washing with HELIX NOZZLE, especially to obtain a high effect on the oil stains.

30 Sec.

With Fine Bubble

Without Fine Bubble

High cleaning effect of the Fine Bubble.

Condition
Nozzle : HELIX NOZZLE =TH-05=
Washing method :In the water
Temperature : 40°C
Water pressure : 0.2MPa
Washing time : 30 sec.

Object to be cleaned : Al die-cast alloy
Dirt : Hydraulic oil VG46

Fine bubble generator and system example

1 **HELIX NOZZLE** [TH-03]

2 Hydraulic pump
100V 0.1kW

3 Taisei Suction filter
To prevent contamination to the pump.

4 Taisei Air Breather and Air Filter
To prevent contamination of the nozzle intake side.

5 Air conditioning parts
To adjust the amount of self-priming air. Ex. valves flow meter.

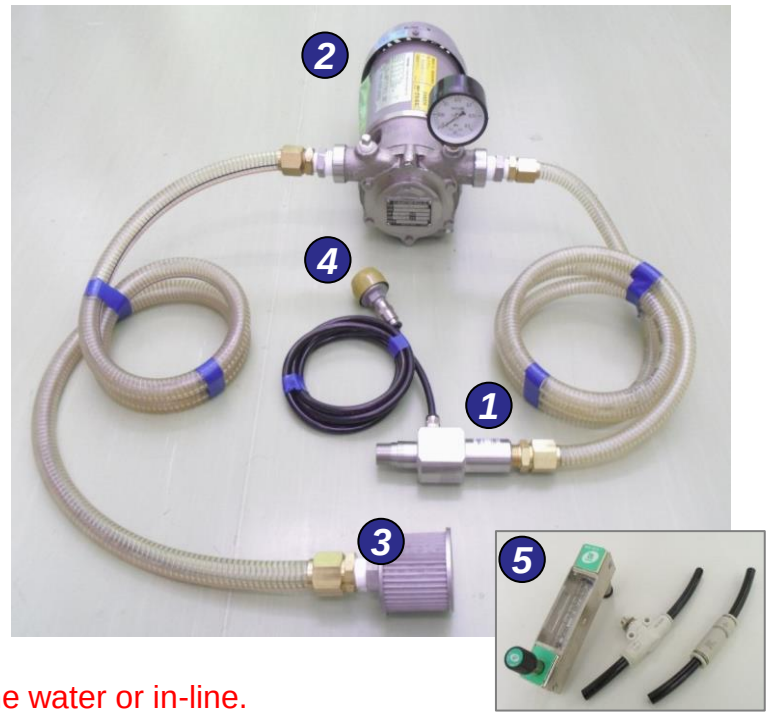

Notice : Nozzle is used and installed in the water or in-line.

Filtration filter

Such as the protection of the cleanup and nozzle pump system, it is possible to select the **Taisei Kogyo** of the various types of filtration filter according to the use environment.

A
Suction Filter

B
Line Filter

C
Air Breather
Air Filter

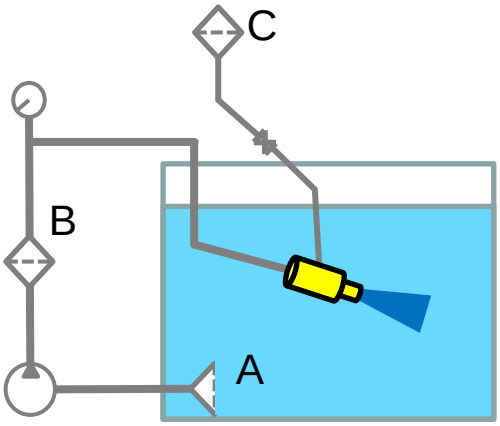

Filtration accuracy

A	B	C
75 – 420μm	5 – 250μm	75 – 420μm

Taisei Kogyo Co., LTD
FB Division

170-8428
Imai-Mitsubishi Building 6F , 3-53-11 Minami-Otsuka ,
Toshima city , Tokyo , Japan
TEL 81-(0)3-6912-9922 FAX 81-(0)3-6912-5921
fb@taiseikogyo.co.jp http://www.taiseikogyo-fb.jp/

Fine Bubble Industries Association
FBIA

Taisei Kogyo Co., LTD is participating company of Fine Bubble Industries Association (FBIA) .